Simplis® | THE ACCESS PANEL COMPANY LTD

Christo Riser Doors

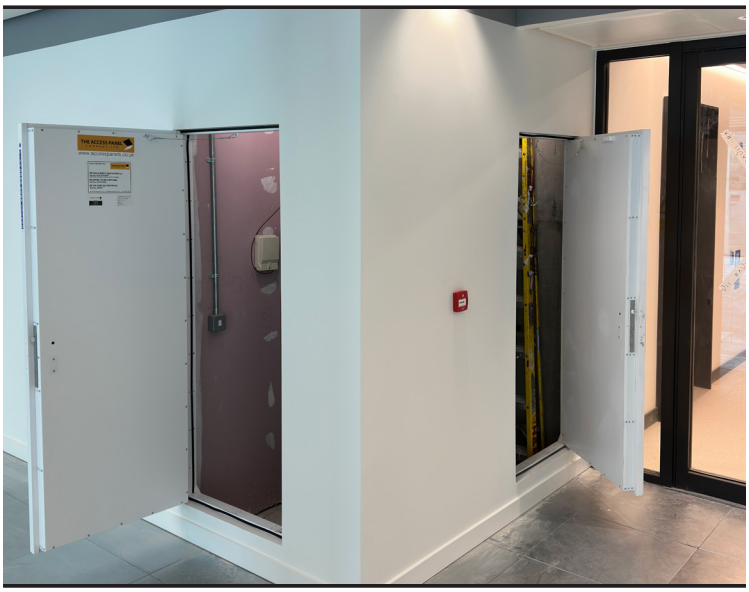

Key Features

- Spring Loaded Invisible Keyhole (SLIK)
- 2 Hour bi-directionally fire tested
- Acoustic standard 43dB (Can acheive 47dB)
- EN and BS fire tested
- Pre-punched fixing holes for simple installation
- Can be over painted to blend into the surrounding surface
- Pivot hinge design
- FrameSmart® Fitting System
- Shaftwall, Rigid, and Flexible wall constructions

Designed and fire tested specifically for use in riser shafts running through larger buildings. Simplis The Access Panel Company fire-tested **Christo Riser Doors** provide protection to riser openings from both sides to prevent fire entering or escaping from the riser shafts and spreading throughout multi-storey buildings. **Christo Riser Doors** can be used in multiple wall constructions stated above.

Possibly the most important access door in the building for compartmentalising the spreadof fire through floors. The **Christo Riser Door** is assessed to cover panels sizes with a max height of **2755mm** and widths of up to **4169mm** and is available with up to **6** leaves. These doors are supplied as complete units and, in fire situations, will outperform timber door sets.

Christo Riser Doors are quick to fit and **blend seamlessly** with the surrounding wall finish. The interlocking doors are almost **100mm** thick and are finished in **powder-coated** white as standard with other colours available. The door leafs comprise steel skins to both the outside and the internal face. They have an insulated strengthened core, high-quality stainless steel ironmongery to the passive leaf, and **multiple-point** locking with **Euro-profile** locks to the active leaf.

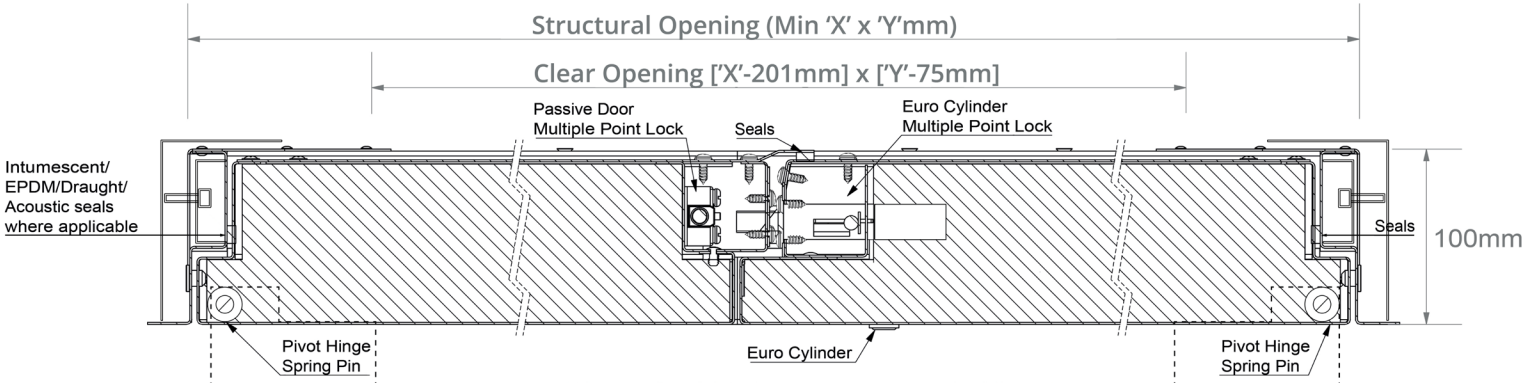

Contact us for a factory tour or to arrange an on site demonstration

sales@simplis.co.uk 01724 853 090 simplis.co.uk

Simplis® | THE ACCESS PANEL COMPANY LTD

Christo Riser Doors







Door Tray & Frame

Formed from **1.0** and **1.2mm Zintec electro-galvanised mild steel** with a **solid picture frame** or **60mm wide perforated frame** finished in **polyester powder coat white (RAL 9010 20% Gloss)**.

Hinge & Lock Mechanism

Includes a **multiple-point locking mechanism** with a variety of locking option combinations. **SLIK** (Patented **Spring Loaded Invisible Keyhole**) and a **Euro-Cylinder barrel**, both fitted as standard. The **SLIK+** option allows the concealment of the **Euro-Cylinder**.

Hinged on **quick release, heavy duty pivot hinges** welded into the door trays.

Fire Rating

Available with **up to 2 hours fire rating**. Rigorously tested to both **EN and BS standards** in **UKAS approved test laboratories**. Certification available upon request.

Smoke Tested

Thermally insulated and **air-sealed options** are available. The **Christo Riser Door** has been tested to **BS EN 1634-3:2004**, achieving an **S-rating**.

Acoustic Rating

Available to a maximum reduction of **47 dB Rw**. Testing being carried out under laboratory conditions to **BS EN ISO 140-3: 2010** by an **independent test centre**. More information available upon request.

Fitting

Prepare a **clear trimmed and protected opening** in the structure **16mm** larger than the ordered riser door.

The **FrameSmart®** system enables **fast**, **accurate** installation by using corner guides and liner parts to create a **precise aperture**, with adjustment screws providing up to **10mm** of in-frame tolerance for perfect levelling and plumbing **without packers** or **mastic**. Once the frame is aligned and secured, the door is refitted onto its pivots.

Double doors are shipped in halves with a half frame to each door and the **frame joining section**. Full fitting instructions are available.

Operation & Maintenance

Using the **'T'-key** supplied, push the **SLIK system** aside, engage the key into the lock, then open and close while supporting the door. The **SLIK system** replaces itself automatically to **conceal the keyhole**.

Avoid **abrasive cleaning materials**. Check the operation annually, especially the hinge points and lock, or more frequently if used very regularly. Tighten or oil as required.

Availability

All **Riser Doors** are **manufactured to order** in the UK. For current lead times and more information please call or email our **Technical Sales Team** for more information.

Online Support

See website for **fitting guides** and **videos**. **DXF**, **DWG**, **CAD**, **PDF**, **BIM cross-section drawings** and full technical specifications.

Contact us for a factory tour or to arrange an on site demonstration

sales@simplis.co.uk 01724 853 090 simplis.co.uk