Simplis® | THE ACCESS PANEL COMPANY LTD

Premium Range Plasterboard Door

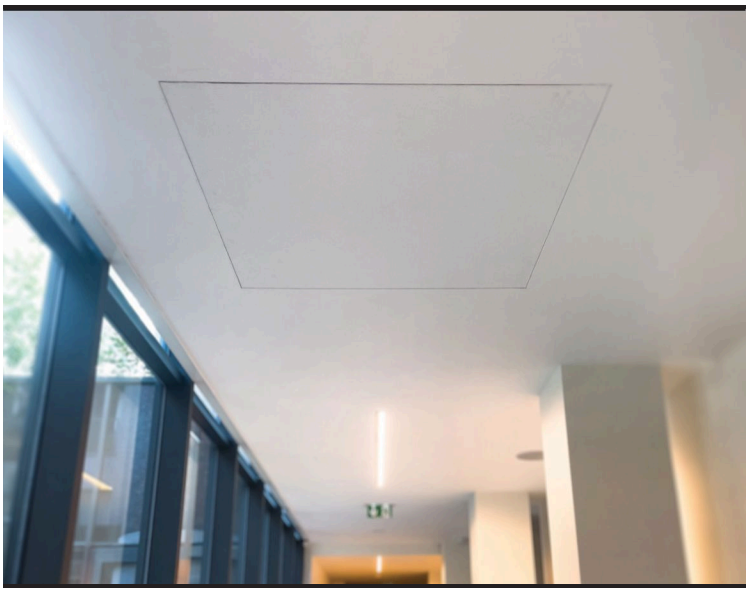

Key Features

- **Up to 1 hour fire rating**
- **Spring Loaded Invisible Keyhole (SLIK) system**
- **Beaded frame**
- **Unique pivot hinge**
- **Can be painted over to blend into surrounding surface**
- **Pre-punched fixing holes for simple installation**
- **Factory fitted plasterboard to door face for over skimming on site**
- **Walls and ceilings**

The **Premium Range Plasterboard Access Panel** provides protected **fire rated access solutions** through **plasterboard ceilings** for access to **building engineering services**. The **robust 50mm profile** produces a **quality solution** that can be used for **fire rated** or **larger plasterboard faced** access solutions. The panels consist of a **reinforced plasterboard faced pivoting or hinged door** tray and frame finished in **powder coated white**. The **double edged door tray** construction offers **greater rigidity** designed to **withstand a greater degree** of abuse to the finished face. The panels are fitted with a **square drive operated lock** accessed by the **Spring Loaded Invisible Keyhole (SLIK)** mechanism. This **dispenses with plastic caps** that highlight the keyhole position and draw unwanted attention to the panel.

The door tray encapsulates a **layer of 12.5mm plasterboard** with a **simulated beaded edge** which provides a key for the tape and joint or skim coat. These panels must be fitted prior to plastering so the metal beaded frame parts of the door and frame can be incorporated into the ceiling or wall membrane in the same way as a conventional stop bead.

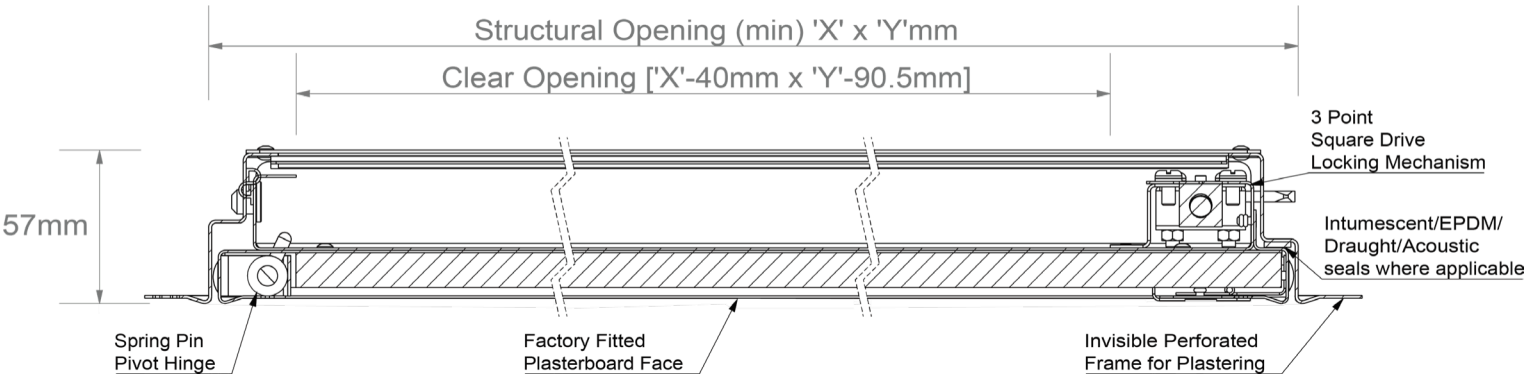

Contact us for a factory tour or to arrange an on-site demonstration

sales@simplis.co.uk **01724 853 090** **simplis.co.uk**

Simplis® | THE ACCESS PANEL COMPANY LTD

Premium Range Plasterboard Door

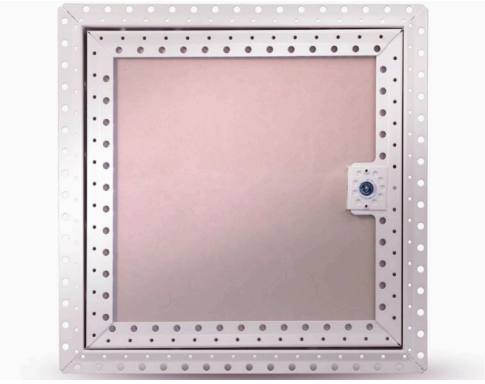

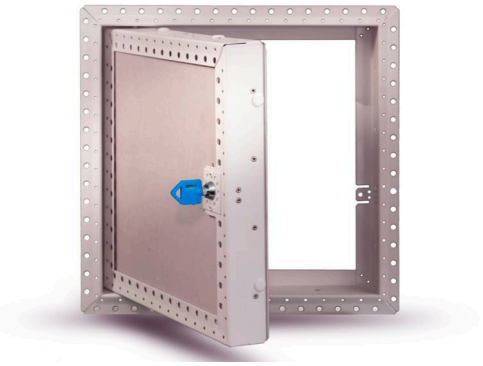

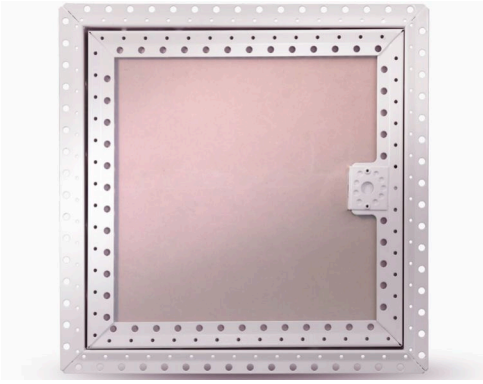

Door Tray & Frame

Formed from **1.0** and **1.2mm** Zintec electrogalvanised mild steel with a **25mm** wide **beaded frame** finished in **polyester powder coat white (RAL 9010 20% Gloss)**.

Hinge & Lock Mechanism

Removable **pivot plate hinge system**. Square drive operated lock riveted to the return fold of the door tray with keyhole concealed by the patented **Spring Loaded Invisible Keyhole (SLIK) system**. **Euro-Cylinder**, **Radial Pin Tumbler** and Three Point Lock option also available.

Fire Rating

Available with **up to 1 hour** fire rating. Fire testing undertaken independently meeting both **EN and BS standards** in **UKAS approved test laboratories**. Certification available upon request.

Availability

Standard sizes (as below) available with **next day delivery** if ordered **before 2pm**. Bespoke sizes available. Please call our **Technical Sales Team** to confirm stock and availability.

Fitting

Prepare a **clear trimmed and protected opening** in the structure **5mm** larger than the ordered panel. Create cut out for the pivot hinges approximately **10mm** × **6mm** so the pivot operation is clear.

Fit with door in frame. Screw fix using **50mm** drywall screws through the **pre-punched holes** to all four sides of the frame using all fixing holes provided. Finish the **beaded frame** in the same way as any plaster stop bead. Finish the skim coat to make the **SLIK** as neat as possible.

To remove the door from the frame, support the door and retract the **spring pin** on each pivot hinge. The door will lift out. When refitting, and after any installation, ensure the spring pins are fully engaged in the frame and, if fitted, that the retaining chains are in place.

Online Support

See website for **fitting guides** and **videos**. **DXF**, **DWG**, **CAD**, **PDF**, **BIM cross-section drawings** and full technical specifications.

Operation & Maintenance

Using the **'T'-key** supplied push the **SLIK system** aside, engage the key into the locks then open and close while supporting the door. The **SLIK system** springs back automatically to **conceal the keyhole**.

Avoid **abrasive cleaning materials**. Annually or more frequently if used very regularly check the operation, especially the hinge points and locks. Tighten or oil as required.

Standard Sizes		
200 x 200	**300 x 300**	**450 x 450**
600 x 600	**900 x 600**	

Contact us for a factory tour or to arrange an on-site demonstration

sales@simplis.co.uk **01724 853 090** **simplis.co.uk**